Overview

The HR5 series fuse type knife switch (hereinafter referred to as the switch) is mainly used in distribution circuits and motor circuits with high short-circuit currents up to 630A, rated AC 400V and 660V (45-62Hz), as a power switch, emergency switch, and circuit protection, but generally not used for directly opening and closing a single motor

The switch complies with IEC60947-3 and GB14048.3 standards

型号及含义

HR 5 - □ / □ □

- “0”为无熔断信号装置型(配用有熔断指示器的熔断体)
- “1”为有熔断信号装置型(配用有熔断撞击的熔断体)
- 极数:2极、3极
- 额定工作电流:100A、200A、400A、630A
- 设计代号
- 熔断器式隔离开关

Main technical parameters

Rated insulation voltage: 690V

Rated working voltage: 400V, 660V two types

Rated working current: 380V: 100A, 200A, 400A, 630A, four types 660V: 100A, 200A, 315A, 425A, four types

The on/off capability and rated short-circuit current of the switch (see Table 1)

The mechanical lifespan of the switch is 3000 times (100A, 200A) and 1000 times (400A, 630A) respectively The electrical life of the switch is 600 times (100A, 200A) and 200 times (400A, 630A) respectively. The connection and disconnection conditions are as shown in Table 2

The rated working voltage of the auxiliary switch (LXI9K) is AC 400V, the rated heating current is 6A, and the rated control capacity is 300VA

额定工作电压 Ue（V）	约定发热电压 Ue（V）	使用类别	额定接通和分断能力							额定熔断短路电流		
			接通	接通	接通	分断	分断	分断	操作	电流有效值(KA)	COSΦ	通断次数
			L/Ie	U/Ue	COSΦ	Ic/Ie	Ur/Ue	COSΦ	循环数			
400	100	AC-23B	10	1.05	0.45	8	1.05	0.45	5	50	0.25	各1次
	200	AC-23B	10	1.05	0.35	8	1.05	0.35	3	50	0.25	各1次
	400	AC-23B	10	1.05	0.35	8	1.05	0.35	3	50	0.25	各1次
	630	AC-23B	10	1.05	0.35	8	1.05	0.35	3	50	0.25	各1次
660	100	AC-22B	3	1.05	0.65	3	1.05	0.65	5	50	0.25	各1次
	200	AC-22B	3	1.05	0.65	3	1.05	0.65	5	50	0.25	各1次
	315	AC-22B	3	1.05	0.65	3	1.05	0.65	5	50	0.25	各1次
	400	AC-22B	3	1.05	0.65	3	1.05	0.65	5	50	0.25	各1次

开关外形安装尺寸(见图1、图2、表2)

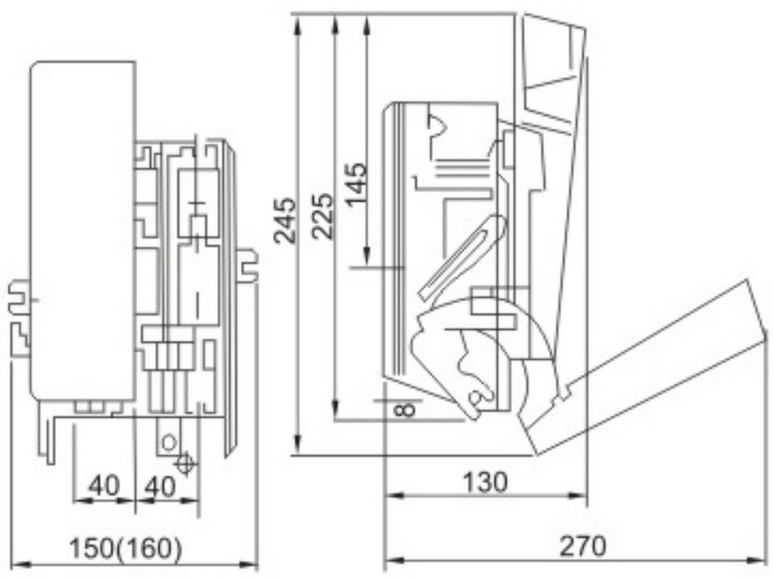

图1 HR5-100A

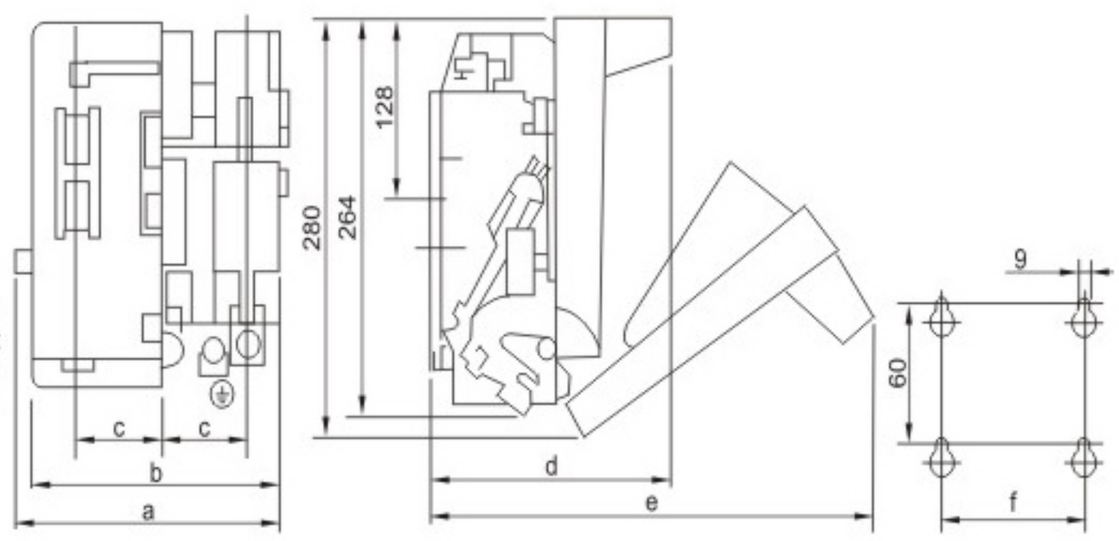

图2 HR5-200、400、R630A

表2

型号	尺寸（mm）					
	a	b	c	d	e	f(安装孔距)
HR5-200/20	203	203	62	193	342	130
HR5-200/30	203	203	62	193	342	130
HR5-200/31	220	203	62	193	342	130
HR5-400/20	226	226	70	210	358	130
HR5-400/30	226	226	70	210	358	130
HR5-400/31	242	226	70	210	358	130
HR5-630/20	272	272	85	224	372	200
HR5-630/30	272	272	85	224	372	200
HR5-630/31	290	272	85	224	372	200